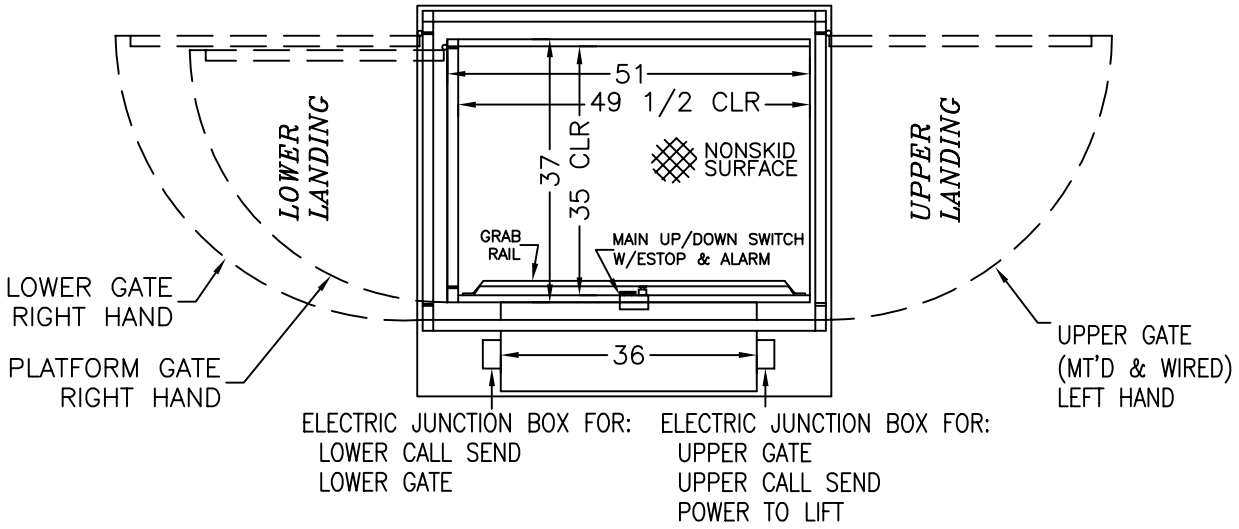

PLAN VIEW

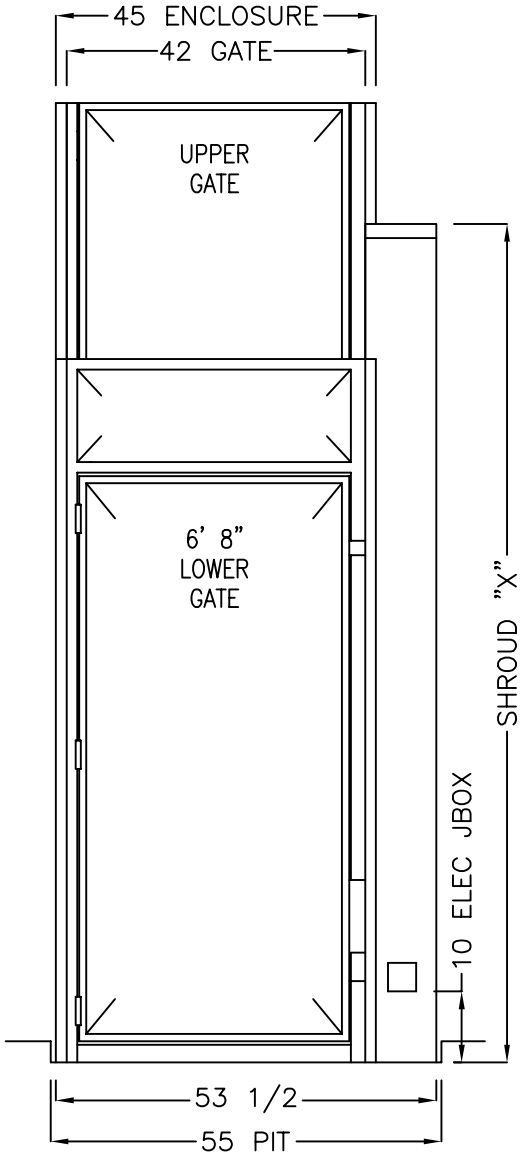

FRONT VIEW

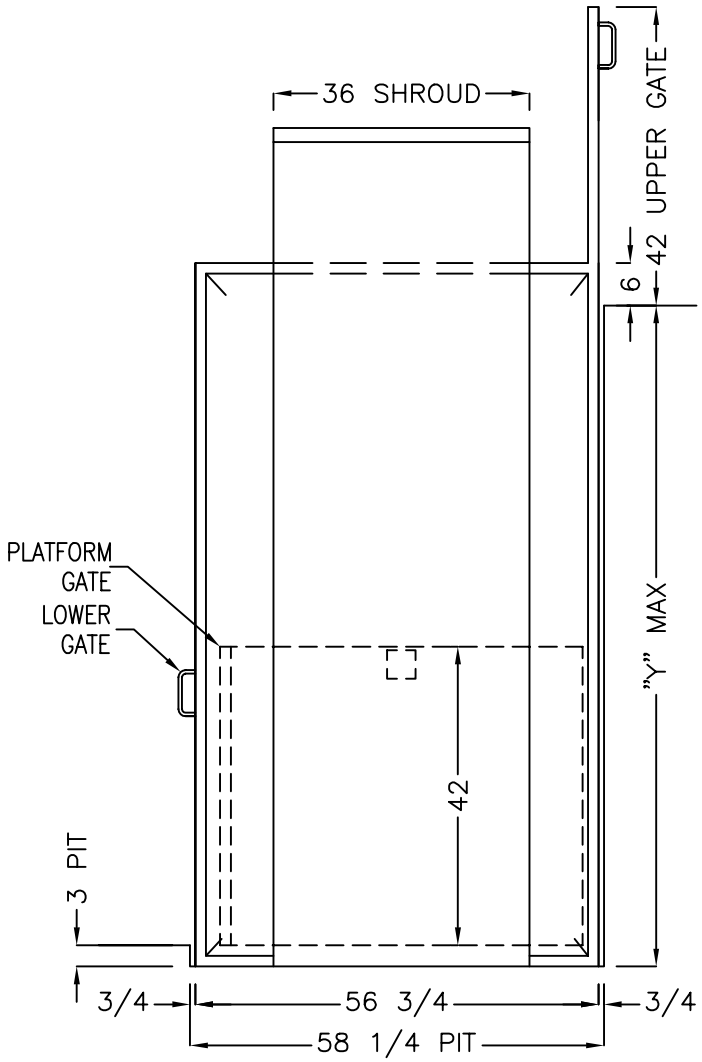

SIDE VIEW

MODEL	"X"IN.	"Y"IN.
CDE–96	118	99
CDE–108	130	111
CDE–120	142	123
CDE–144	171	147

DIMENSIONS SUBJECT TO CHANGE WITHOUT NOTIFICATION.

NATIONAL WHEEL–O–VATOR
509 W. FRONT ST.
ROANOKE, ILLINOIS 61561
1–800–551–9095

JANUARY 2003

MODEL: CDE SHROUD RIGHT

DRAWING NUMBER: CC–2043

ALL DIMENSIONS SUBJECT TO STANDARD INDUSTRY TOLERANCES UNLESS OTHERWISE SPECIFIED.